OwO Imaging
SOLUTIONS

ATLAS-U

PREMIUM U-ARM SYSTEM



NEW GENERATION DIGITAL RADIOGRAPHY SYSTEM

- *The ATLAS-U is a universal, fully motorized system.*
- *17x17 in wired CsI detector with the highest DQE*
- *U-arm rotates +120° ~ -30°*
- *SID travels 40 in ~ 72in to enable any examination*
- *All movements can be automatically programmed*
- *Equipped with eleven(11) anti-collision sensors to safely protect patients and operators.*

The ATLAS-U's unique compact U-arm design features dual telescoping arm movement that permits installation in
settings having ceiling heights of just eight (8) feet.
The ELIAN also provides dual-speed movement to improve user convenience, and the fast-moving arm increases the system throughput.
The ATLAS U comes equipped with a 17 x17 inch Cesium detector with the highest DQE enclosed in a durable detector assembly with an easily removable grid.
The ATLAS-U fully motorized movements for SID, arm rotation, height, and detector angle can be automatically programmed to user-specific radiographic positions utilizing the intuitive graphic user interface located tube side or by using the technician workstation.



CONFIGURATIONS AVAILABLE				
Generator	40 kW 1Ø 208/230V	50 kW 3Ø 208/230V	65 kW 3Ø 400/480V	80 kW 3Ø 400/480V
Tube	200 kHU 40-125 kVp 10 to 500 mA	300 kHU 40-150 kVp 10 to 630 mA	400 kHU 40-150kVp 10 to 800 mA	
Collimator	Manual		Automatic	
Detector	Wired 140 Microns		Wireless 100 Microns	

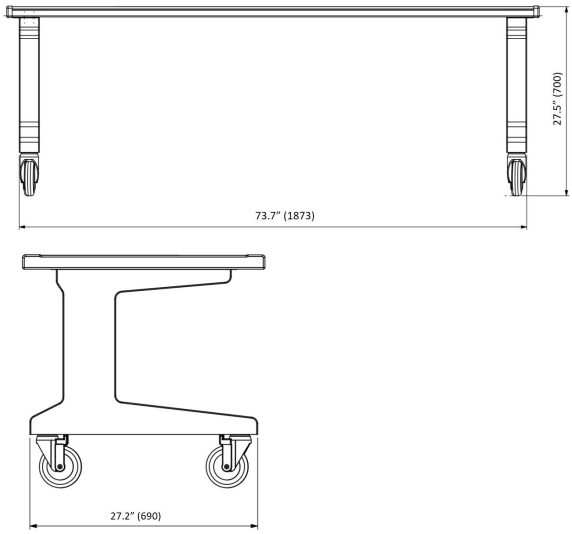

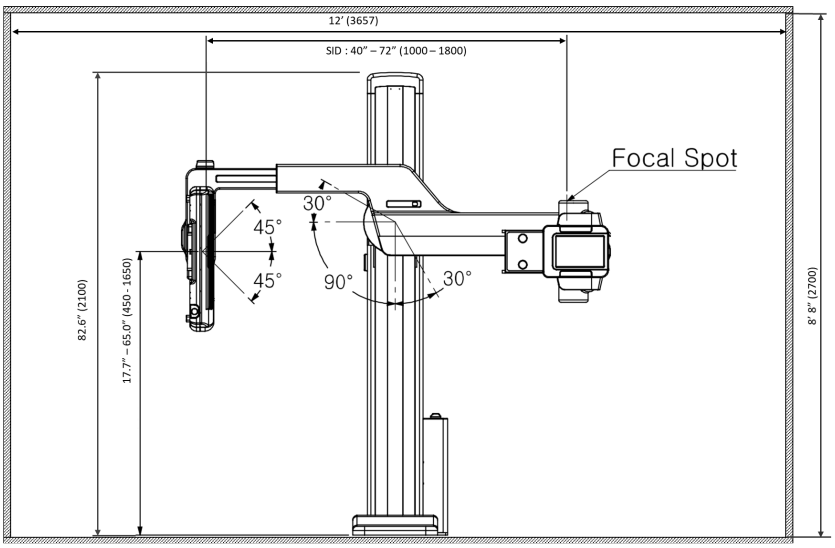

OwO Imaging
SOLUTIONS

CONTACT US TODAY

www.owoimaging,com
info@owoimaging.com
+1-305-905-7314
13820 SW 139th Ct, Miami, FL,33186, USA

© 2026 OwO Imaging LLC. All Rights Reserved.